Space Saver Keyboard

User's Guide

OPTIONS
by IBM

Note: If you are using this product in the United States, Canada, or Puerto Rico, be sure to read the information under Appendix C, "Product warranty and notices" on page 3-4 before using this information and the product it supports.

For all other countries, the warranty terms and conditions applicable in the country of purchase are available from IBM or your reseller.

First Edition (May 1999)

The following paragraph does not apply to the United Kingdom or any country where such provisions are inconsistent with local law: INTERNATIONAL BUSINESS MACHINES CORPORATION PROVIDES THIS PUBLICATION "AS IS" WITHOUT WARRANTY OF ANY KIND, EITHER EXPRESS OR IMPLIED, INCLUDING, BUT NOT LIMITED TO, THE IMPLIED WARRANTIES OF MERCHANTABILITY OR FITNESS FOR A PARTICULAR PURPOSE. Some states do not allow disclaimer of express or implied warranties in certain transactions, therefore, this statement may not apply to you.

This publication could include technical inaccuracies or typographical errors. Changes are periodically made to the information herein; these changes will be incorporated in new editions of the publication. IBM may make improvements and/or changes in the product(s) and/or the program(s) described in this publication at any time.

This publication was developed for products and services offered in the United States of America. IBM may not offer the products, services, or features discussed in this document in other countries, and the information is subject to change without notice. Consult your local IBM representative for information on the products, services, and features available in your area.

Requests for technical information about IBM products should be made to your IBM reseller or IBM marketing representative.

Copyright International Business Machines Corporation 1999. All rights reserved.
Note to U.S. Government Users — Documentation related to restricted rights — Use, duplication or disclosure is subject to restrictions set forth in GSA ADP Schedule Contract with IBM Corp.

Contents

Product registration iv

About this book iv

Part 1: Installation guide 1-1

Part 2: User's guide 2-1

Using the Space Saver keyboard 2-1
Using the TrackPoint pointing device 2-2
Customizing your TrackPoint pointing device 2-2
Adjusting mouse properties in Windows 98, Windows 95, or Windows NT 4.0 2-6
Using the embedded numeric keypad 2-6

Maintaining the Space Saver keyboard 2-7

Part 3: Appendixes 3-1

Appendix A. Problem solving 3-1

Appendix B. Help and service information 3-2
Online technical support 3-3
Telephone technical support 3-3

Appendix C. Product warranty and notices 3-4
Warranty Statements 3-4
Notices 3-13
Trademarks 3-13
Electronic emission notices 3-14

Copyright IBM Corp. 1999

Product registration

Thank you for purchasing OPTIONS by IBM . Please take a few moments to register your product and provide us with information that will help IBM to better serve you in the future. Your feedback is valuable to us in developing products and services that are important to you, as well as in developing better ways to communicate with you. Register your option on the IBM Web site at:

http://www.pc.ibm.com/register

IBM will send you information and updates on your registered product unless you indicate on the Web site questionnaire that you do not want to receive further information.

About this book

This manual contains information on the Space Saver keyboard. It is divided into the following parts:

Part 1: Installation guide

This section contains the product description and installation instructions in the following languages: English, German, French, Spanish, Italian, Chinese, and Japanese.

Part 2: User's guide

This section contains information on using and maintaining the keyboard.

Part 3: Appendixes

This section contains problem-solving, service, warranty, and notice information.

Note: The illustrations in this manual might be slightly different from your hardware.

Part 1: Installation guide

This guide contains product description, hardware and software installation instructions, and product use and maintenance information. For information on solving problems, see Appendix A, “Problem solving” on page 3-1. For additional information on using this product, visit the IBM Healthy Computing Web site, at:

http://www.pc.ibm.com/healthycomputing

Product description

This IBM Space Saver keyboard works with IBM and ISA-standard computers that have 6-pin, mini-DIN, PS/2-style keyboard and mouse connectors. You can use the TrackPoint pointing device for pointing, selecting, dragging, or scrolling. As a result, you do not need to use a mouse with the keyboard. However, you have the option of connecting a mouse to the mouse connector on the bottom of the keyboard. Three buttons are located below the Spacebar on the keyboard. The left and right buttons work similarly to the buttons on a mouse. Pressing the middle button changes the built-in TrackPoint stick from a pointing device to a scrolling device.

The keyboard provides Press-to-Select and third-button scrolling functions for Microsoft Windows 98, Windows 95, Windows NT 4.0 and IBM OS/2 Version 4 operating systems. However, if you are using a mouse that comes with its own device driver, you will need to uninstall the mouse device driver before you can use the Press-to-Select and third-button scrolling functions. For more information, see “Connecting a mouse to the keyboard” on page 1-4. The keyboard will function only as a standard PS/2-style keyboard and mouse for DOS Version 5.02 or later, Windows 3.1, and IBM OS/2 Version 3. Any earlier versions of these operating systems are not supported. For more information on Space Saver keyboard features, see “Using the Space Saver keyboard” on page 2-1.

Note: The keyboard will not work when it is connected to:

- More than one computer
- A non-IBM notebook computer
- Any mouse port other than a PS/2-style mouse port
- A computer serial port

Copyright IBM Corp. 1999

The keyboard option includes:

Space Saver keyboard
Space Saver Keyboard software CD
Bag of spare caps for the Space Saver TrackPoint pointing device
Space Saver Keyboard User's Guide (this booklet)

Note: If you are attaching the Space Saver keyboard to a ThinkPad notebook computer that does not have a docking station or port replicator, you must purchase an IBM Keyboard/Mouse Connector cable (IBM part number 54G0441). To order the Keyboard/Mouse Connector cable, call IBM PC Direct at 1-800-PC-DIRECT, or contact your local computer store.

Contact your place of purchase if any parts are missing or damaged. Be sure to retain your proof of purchase because it might be required to obtain warranty service.

Connecting the keyboard to a computer

Note: You must completely turn off a ThinkPad notebook computer before connecting or disconnecting the keyboard. Be sure the ThinkPad notebook computer is not in one of the suspend or sleep modes when you connect or disconnect the keyboard. If the ThinkPad notebook computer is in one of these modes when you connect or disconnect the keyboard, the correct TrackPoint device driver might not be installed when the system returns to full power.

To connect your keyboard to a personal computer, switchbox, docking station, or port replicator, follow these steps.

1. Turn off your computer and all attached devices.
2. Disconnect any keyboard or mouse attached to the computer.

3. Look at the two connectors at the end of the keyboard cable. One connector shows a symbol of a keyboard 1 and one shows a symbol of a mouse 2 .

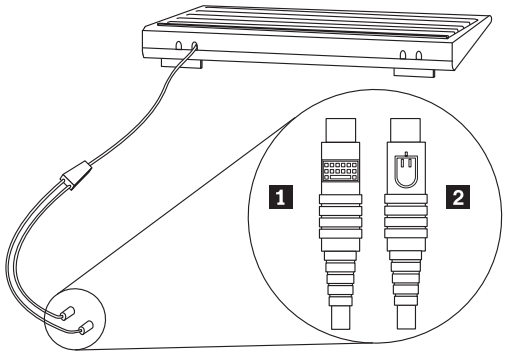

Note: If you are using a ThinkPad notebook computer without a docking station or port replicator, you must use an IBM Keyboard/Mouse Connector cable to connect the keyboard to the ThinkPad single port.

4. Insert the connector with the keyboard symbol into the keyboard port 1 on a computer, switchbox, docking station, or port replicator.
5. Insert the connector with the mouse symbol into the mouse port 2 on a computer, switchbox, docking station, or port replicator.
6. Turn on your computer and attached devices.

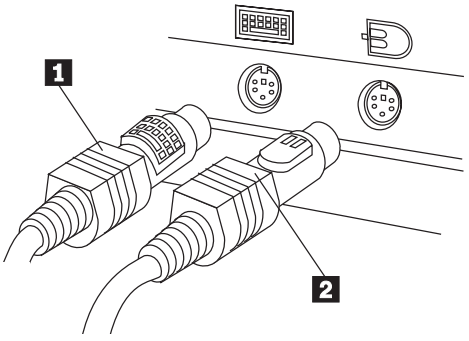

Connecting a mouse to the keyboard

Note: If you are connecting a mouse that comes with its own device driver, you cannot use the mouse device driver with the Space Saver software. Therefore, you must uninstall the mouse device driver so that you can use the Space Saver software to enable the TrackPoint Press-to-Select and third-button scrolling features. If you do not uninstall the mouse device driver, you can still use the keyboard as a standard PS/2-style keyboard. For instructions on how to uninstall the mouse device driver and configure the mouse to function as a standard PS/2-style mouse, refer to the documentation that comes with the device driver or with the mouse.

You can connect a mouse or other pointing device to the keyboard. The mouse or pointing device must be PS/2-style with a 6-pin, mini-DIN connector. When a mouse is connected, you can use it or the TrackPoint pointing device or both.

To install a mouse, attach it to the round mouse connector on the bottom of the keyboard 1 .

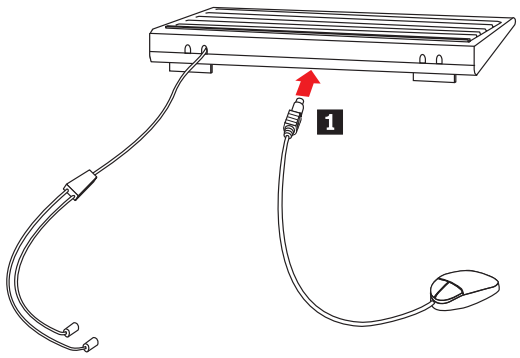

The mouse is now operational.

When to disable the ThinkPad onboard pointing device

Use the Space Saver Keyboard software CD to install the device driver even if the TrackPoint pointing device is included in your ThinkPad computer.

After you install the TrackPoint device driver on a ThinkPad notebook computer, the onboard TrackPoint pointing device on most ThinkPad notebook computers will be automatically disabled each time you start your computer with the keyboard connected.

However, on a ThinkPad 600, 770, 390, i-series, or other late model ThinkPad notebook computer, you must follow these steps to disable the ThinkPad TrackPoint pointing device:

1. Click **Start**.
2. Select **Programs**, **ThinkPad**, **ThinkPad Configuration**.
3. Click the **TrackPoint** icon.
4. Select **Auto-Disable** on the pull-down menu next to **TrackPoint**.
5. Click **OK** to save changes.
6. Click **OK** to restart the ThinkPad notebook computer.

Installing Space Saver software

Be sure to read the software agreement on the software CD before you install a Space Saver device driver. To open the CD file containing the software license agreement:

Note: These instructions might vary depending on the browser software you are using.

1. Open your Internet browser software.
2. Click the **File** menu and select **Open File in Browser**.
3. In the dialog box, locate the CD-ROM drive.
4. You will see a folder and the WELCOME.HTML file. Click the WELCOME.HTML file to select it.
5. Click **OK** to open the file in your browser.
6. To return to your designated home page, close the browser or click the **Home** button .

Installation instructions are provided below for the Space Saver device drivers for Windows 98, Windows 95, Windows NT 4.0, and OS/2 Version 4.

Note: The Space Saver device driver does not support DOS Version 5.02 or later, Windows 3.1, or OS/2 Version 3. However, you can still use the keyboard as a standard PS/2-style keyboard and mouse if the operating system includes a generic mouse device driver. For information on installing a generic mouse device driver, refer to the documentation that comes with your mouse or with your operating system.

Installing the device driver for Windows 98

Note: If this procedure does not work with your operating system, you might need to uninstall your current mouse support, such as MouseWare. For mouse uninstallation instructions, double-click **Add/Remove Programs** in the Control Panel window or refer to the documentation that comes with your operating system or with the mouse.

To install the device driver for Windows 98:

1. Start Windows 98.
2. Insert the Space Saver Keyboard software CD into the CD-ROM drive.
3. On the Taskbar, click **Start**.

4. Select **Settings**; then, click **Control Panel**.
5. Double-click **System** to open the System Properties window.
6. Click the **Device Manager** tab in the System Properties window.
7. Double-click the **Mouse** icon.
8. Double-click **IBM PS/2 TrackPoint** or **PS/2 Mouse Port**.
9. Click the **Driver** tab in the IBM PS/2 TrackPoint Properties window.
10. Click **Update Driver...**.
11. Click **Next**.
12. Click to place a check in the **Display a list of all drivers in a specific location** check box.
13. Click **Next**.
14. Click **Have Disk...**.
15. Click **OK**.
16. Click **IBM PS/2 TrackPoint** in the displayed list.
17. Click **Next**.
18. If the Update Driver Warning window opens, click **Yes**.
19. Click **Next**.
20. Click **Finish** in the Update Device Driver Wizard window.
21. Remove the Space Saver Keyboard software CD from the CD-ROM drive.
22. Restart your computer so the new settings take effect.

Installing the device driver for Windows 95 or Windows NT 4.0

Note: If this procedure does not work with your operating system, you might need to uninstall your current mouse support, such as MouseWare. For mouse uninstallation instructions, double-click **Add/Remove Programs** in the Control Panel window or refer to the documentation that comes with your operating system or with the mouse.

To install the device driver for Windows 95 or Windows NT 4.0:

1. Start Windows 95 or Windows NT 4.0.
2. Insert the Space Saver Keyboard software CD into the CD-ROM drive.
3. On the Taskbar, click **Start**.
4. Select **Settings**; then, click **Control Panel**.
5. Double-click the **Mouse** icon to open the Mouse Properties window.
6. Click the **General** tab in the Mouse Properties window.
7. Click **Change**.
8. Click **Have Disk...**.
9. Click **OK**.
10. Click **IBM PS/2 TrackPoint** in the displayed list.
11. Click **OK** to install the Space Saver keyboard device driver.
12. Click **Close** in the Mouse Properties window.
13. Remove the Space Saver Keyboard software CD from the CD-ROM drive.
14. Restart your computer so the new settings take effect.

Installing the device driver for OS/2 Version 4

Note: If this procedure does not work with your operating system, you might need to uninstall your current mouse support. For mouse uninstallation instructions, refer to the documentation that comes with your current mouse.

To install the device driver for OS/2 Version 4:

1. Start OS/2.
2. Insert the Space Saver Keyboard software CD into the CD-ROM drive.
3. Double-click **OS/2 System** on the desktop.
4. Double-click **Command Prompts**.
5. Double-click **OS/2 Window**.
6. At the **C:** prompt, type `X:\OS2\install` where *X* is the drive letter of your CD-ROM drive and press Enter.
7. Follow the on-screen instructions. (If you are prompted to choose a directory for installing the files, select the drive containing OS/2.)
8. Remove the Space Saver Keyboard software CD from the CD-ROM drive.
9. Restart your computer so the new settings take effect.

Uninstalling the Space Saver device driver

If you want to remove the keyboard, you must uninstall the Space Saver device driver for Windows 98, Windows 95, Windows NT 4.0, and OS/2 Version 4 and disconnect the Space Saver keyboard.

Uninstalling the device driver for Windows 98

Before you uninstall the Space Saver application in Windows 98, replace it with the standard mouse device driver using the following instructions:

1. On the Taskbar, click **Start**.
2. Select **Settings**; then, click **Control Panel**.
3. Double-click **System**.
4. Click the **Device Manager** tab.
5. Double-click the **Mouse** icon.
6. Double-click **IBM PS/2 TrackPoint**.
7. Click the **Driver** tab.
8. Click **Update Driver**.
9. Click **Next**.
10. Click to place a check in the **Search for better driver than the one your drive is using now (Recommended)** check box.
11. Click **Next**.
12. Click to place a check in the **CD-ROM Drive** check box; then, click **Next**.
13. Click to place a check in the **Updated Driver (Recommended) PS/2 Compatible Mouse Port** check box.
14. Click **Next**.
15. Click **Next**.

16. Restart your computer so the new settings take effect.

To uninstall the Space Saver application for Windows 98:

1. On the Taskbar, click **Start**.
2. Select **Settings**; then, click **Control Panel**.
3. Double-click **Add/Remove Programs**.
4. Select **IBM TrackPoint Keyboard Support** from the displayed list and click **Add/Remove** to uninstall the application.
5. Click **OK**; then restart your computer so the new settings take effect.

Uninstalling the device driver for Windows 95 or Windows NT 4.0

Before you uninstall the Space Saver application in Windows 95 or Windows NT 4.0, replace it with the standard mouse device driver using the following instructions:

1. On the Taskbar, click **Start**.
2. Select **Settings**; then, click **Control Panel**.
3. Double-click the **Mouse** icon to open **Mouse Properties**.
4. Click the **General** tab in the Mouse Properties window.
5. Click **Change**.
6. Click to place a check in the **Show all devices** check box.
7. On the left side under Manufacturers, select **(Standard mouse types)**.
8. On the right side, select **Standard PS/2 Port Mouse**.
9. Click **OK**.
10. Click **Close** in the Mouse Properties window.
11. Restart your computer so the new settings take effect.

To uninstall the Space Saver application for Windows 95 or Windows NT 4.0:

1. On the Taskbar, click **Start**.
2. Select **Settings**; then, click **Control Panel**.
3. Double-click **Add/Remove Programs**.
4. Select **IBM TrackPoint Keyboard Support** from the displayed list and click **Add/Remove** to uninstall the application.
5. Click **OK**; then restart your computer so the new settings take effect.

Uninstalling the device driver for OS/2 Version 4

To uninstall the device driver for OS/2 Version 4:

1. Start OS/2.
2. Insert the Space Saver Keyboard software CD into the CD-ROM drive.
3. Double-click **OS/2 System** on the Desktop.
4. Double-click **Command Prompts**.
5. Double-click **OS/2 Window**.
6. At the **C:** prompt, type `X:\OS2\install` where *X* is the drive letter of your CD-ROM drive and press Enter.
7. Follow the on-screen instructions.
8. Click to place a check in the **Delete the installed product and re-install** check box in the Installation Options window, and click **Continue**.

9. Select **TrackPoint Support** and click **Delete**.
10. Restart your computer to activate the changes.

Installation guide (Translate)

This guide contains product description, hardware and software installation instructions, and product use and maintenance information. For information on solving problems, see Appendix A, “Problem solving” on page 3-1. For additional information on using this product, visit the IBM Healthy Computing Web site, at:

http://www.pc.ibm.com/healthycomputing

Product description

This IBM Space Saver keyboard works with IBM and ISA-standard computers that have 6-pin, mini-DIN, PS/2-style keyboard and mouse connectors. You can use the TrackPoint pointing device for pointing, selecting, dragging, or scrolling. As a result, you do not need to use a mouse with the keyboard. However, you have the option of connecting a mouse to the mouse connector on the bottom of the keyboard. Three buttons are located below the Spacebar on the keyboard. The left and right buttons work similarly to the buttons on a mouse. Pressing the middle button changes the built-in TrackPoint stick from a pointing device to a scrolling device.

The keyboard provides Press-to-Select and third-button scrolling functions for Microsoft Windows 98, Windows 95, Windows NT 4.0 and IBM OS/2 Version 4 operating systems. However, if you are using a mouse that comes with its own device driver, you will need to uninstall the mouse device driver before you can use the Press-to-Select and third-button scrolling functions. For more information, see “Connecting a mouse to the keyboard.” The keyboard will function only as a standard PS/2-style keyboard and mouse for DOS Version 5.02 or later, Windows 3.1, and IBM OS/2 Version 3. Any earlier versions of these operating systems are not supported. For more information on Space Saver keyboard features, see “Using the Space Saver keyboard” on page 2-1.

Note: The keyboard will not work when it is connected to:

- More than one computer
- A non-IBM notebook computer
- Any mouse port other than a PS/2-style mouse port
- A computer serial port

The keyboard option includes:

Space Saver keyboard
Space Saver Keyboard software CD
Bag of spare caps for the Space Saver TrackPoint pointing device
Space Saver Keyboard User's Guide (this booklet)

Note: If you are attaching the Space Saver keyboard to a ThinkPad notebook computer that does not have a docking station or port replicator, you must purchase an IBM Keyboard/Mouse Connector cable (IBM part number 54G0441). To order the Keyboard/Mouse Connector cable, call IBM PC Direct at 1-800-PC-DIRECT, or contact your local computer store.

Contact your place of purchase if any parts are missing or damaged. Be sure to retain your proof of purchase because it might be required to obtain warranty service.

Connecting the keyboard to a computer

Note: You must completely turn off a ThinkPad notebook computer before connecting or disconnecting the keyboard. Be sure the ThinkPad notebook computer is not in one of the suspend or sleep modes when you connect or disconnect the keyboard. If the ThinkPad notebook computer is in one of these modes when you connect or disconnect the keyboard, the correct TrackPoint device driver might not be installed when the system returns to full power.

To connect your keyboard to a personal computer, switchbox, docking station, or port replicator, follow these steps.

1. Turn off your computer and all attached devices.
2. Disconnect any keyboard or mouse attached to the computer.

3. Look at the two connectors at the end of the keyboard cable. One connector shows a symbol of a keyboard 1 and one shows a symbol of a mouse 2 .

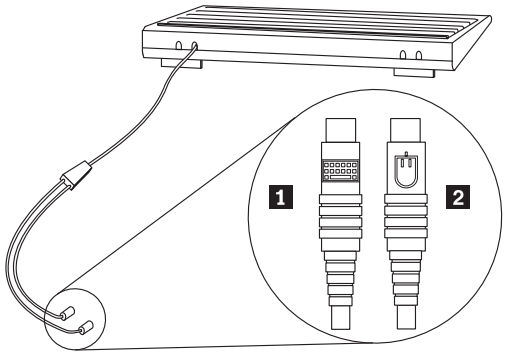

Note: If you are using a ThinkPad notebook computer without a docking station or port replicator, you must use an IBM Keyboard/Mouse Connector cable to connect the keyboard to the ThinkPad single port.

4. Insert the connector with the keyboard symbol into the keyboard port 1 on a computer, switchbox, docking station, or port replicator.
5. Insert the connector with the mouse symbol into the mouse port 2 on a computer, switchbox, docking station, or port replicator.
6. Turn on your computer and attached devices.

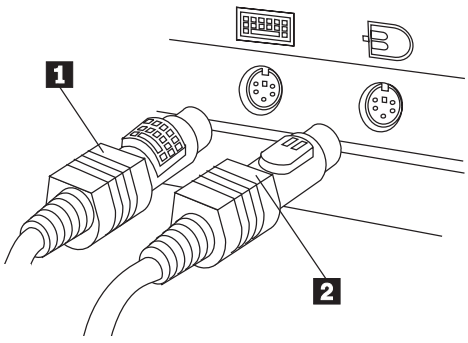

Connecting a mouse to the keyboard

Note: If you are connecting a mouse that comes with its own device driver, you cannot use the mouse device driver with the Space Saver software. Therefore, you must uninstall the mouse device driver so that you can use the Space Saver software to enable the TrackPoint Press-to-Select and third-button scrolling features. If you do not uninstall the mouse device driver, you can still use the keyboard as a standard PS/2-style keyboard. For instructions on how to uninstall the mouse device driver and configure the mouse to function as a standard PS/2-style mouse, refer to the documentation that comes with the device driver or with the mouse.

You can connect a mouse or other pointing device to the keyboard. The mouse or pointing device must be PS/2-style with a 6-pin, mini-DIN connector. When a mouse is connected, you can use it or the TrackPoint pointing device or both.

To install a mouse, attach it to the round mouse connector on the bottom of the keyboard 1 .

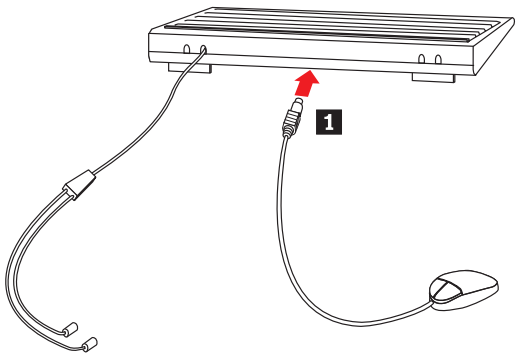

The mouse is now operational.

When to disable the ThinkPad onboard pointing device

Use the Space Saver Keyboard software CD to install the device driver even if the TrackPoint pointing device is included in your ThinkPad computer.

After you install the TrackPoint device driver on a ThinkPad notebook computer, the onboard TrackPoint pointing device on most ThinkPad notebook computers will be automatically disabled each time you start your computer with the keyboard connected.

However, on a ThinkPad 600, 770, 390, i-series, or other late model ThinkPad notebook computer, you must follow these steps to disable the ThinkPad TrackPoint pointing device:

1. Click **Start**.
2. Select **Programs**, **ThinkPad**, **ThinkPad Configuration**.
3. Click the **TrackPoint** icon.
4. Select **Auto-Disable** on the pull-down menu next to **TrackPoint**.
5. Click **OK** to save changes.
6. Click **OK** to restart the ThinkPad notebook computer.

Installing Space Saver software

Be sure to read the software agreement on the software CD before you install a Space Saver device driver. To open the CD file containing the software license agreement:

Note: These instructions might vary depending on the browser software you are using.

1. Open your Internet browser software.
2. Click the **File** menu and select **Open File in Browser**.
3. In the dialog box, locate the CD-ROM drive.
4. You will see a folder and the WELCOME.HTML file. Click the WELCOME.HTML file to select it.
5. Click **OK** to open the file in your browser.
6. To return to your designated home page, close the browser or click the **Home** button .

Installation instructions are provided below for the Space Saver device drivers for Windows 98, Windows 95, Windows NT 4.0, and OS/2 Version 4.

Note: The Space Saver device driver does not support DOS Version 5.02 or later, Windows 3.1, or OS/2 Version 3. However, you can still use the keyboard as a standard PS/2-style keyboard and mouse if the operating system includes a generic mouse device driver. For information on installing a generic mouse device driver, refer to the documentation that comes with your mouse or with your operating system.

Installing the device driver for Windows 98

Note: If this procedure does not work with your operating system, you might need to uninstall your current mouse support, such as MouseWare. For mouse uninstallation instructions, double-click **Add/Remove Programs** in the Control Panel window or refer to the documentation that comes with your operating system or with the mouse.

To install the device driver for Windows 98:

1. Start Windows 98.
2. Insert the Space Saver Keyboard software CD into the CD-ROM drive.
3. On the Taskbar, click **Start**.

4. Select **Settings**; then, click **Control Panel**.
5. Double-click **System** to open the System Properties window.
6. Click the **Device Manager** tab in the System Properties window.
7. Double-click the **Mouse** icon.
8. Double-click **IBM PS/2 TrackPoint** or **PS/2 Mouse Port**.
9. Click the **Driver** tab in the IBM PS/2 TrackPoint Properties window.
10. Click **Update Driver...**.
11. Click **Next**.
12. Click to place a check in the **Display a list of all drivers in a specific location** check box.
13. Click **Next**.
14. Click **Have Disk...**.
15. Click **OK**.
16. Click **IBM PS/2 TrackPoint** in the displayed list.
17. Click **Next**.
18. If the Update Driver Warning window opens, click **Yes**.
19. Click **Next**.
20. Click **Finish** in the Update Device Driver Wizard window.
21. Remove the Space Saver Keyboard software CD from the CD-ROM drive.
22. Restart your computer so the new settings take effect.

Installing the device driver for Windows 95 or Windows NT 4.0

Note: If this procedure does not work with your operating system, you might need to uninstall your current mouse support, such as MouseWare. For mouse uninstallation instructions, double-click **Add/Remove Programs** in the Control Panel window or refer to the documentation that comes with your operating system or with the mouse.

To install the device driver for Windows 95 or Windows NT 4.0:

1. Start Windows 95 or Windows NT 4.0.
2. Insert the Space Saver Keyboard software CD into the CD-ROM drive.
3. On the Taskbar, click **Start**.
4. Select **Settings**; then, click **Control Panel**.
5. Double-click the **Mouse** icon to open the Mouse Properties window.
6. Click the **General** tab in the Mouse Properties window.
7. Click **Change**.
8. Click **Have Disk...**.
9. Click **OK**.
10. Click **IBM PS/2 TrackPoint** in the displayed list.
11. Click **OK** to install the Space Saver keyboard device driver.
12. Click **Close** in the Mouse Properties window.
13. Remove the Space Saver Keyboard software CD from the CD-ROM drive.
14. Restart your computer so the new settings take effect.

Installing the device driver for OS/2 Version 4

Note: If this procedure does not work with your operating system, you might need to uninstall your current mouse support. For mouse uninstallation instructions, refer to the documentation that comes with your current mouse.

To install the device driver for OS/2 Version 4:

1. Start OS/2.
2. Insert the Space Saver Keyboard software CD into the CD-ROM drive.
3. Double-click **OS/2 System** on the desktop.
4. Double-click **Command Prompts**.
5. Double-click **OS/2 Window**.
6. At the **C:** prompt, type `X:\OS2\install` where *X* is the letter of your CD-ROM drive and press Enter.
7. Follow the on-screen instructions. (If you are prompted to choose a directory for installing the files, select the drive containing OS/2.)
8. Remove the Space Saver Keyboard software CD from the CD-ROM drive.
9. Restart your computer so the new settings take effect.

Uninstalling the Space Saver device driver

If you want to remove the keyboard, you must uninstall the Space Saver device driver for Windows 98, Windows 95, Windows NT 4.0, and OS/2 Version 4 and disconnect the Space Saver keyboard.

Uninstalling the device driver for Windows 98

Before you uninstall the Space Saver application in Windows 98, replace it with the standard mouse device driver using the following instructions:

1. On the Taskbar, click **Start**.
2. Select **Settings**; then, click **Control Panel**.
3. Double-click **System**.
4. Click the **Device Manager** tab.
5. Double-click the **Mouse** icon.
6. Double-click **IBM PS/2 TrackPoint**.
7. Click the **Driver** tab.
8. Click **Update Driver**.
9. Click **Next**.
10. Click to place a check in the **Search for better driver than the one your drive is using now (Recommended)** check box.
11. Click **Next**.
12. Click to place a check in the **CD-ROM Drive** check box; then, click **Next**.
13. Click to place a check in the **Updated Driver (Recommended) PS/2 Compatible Mouse Port** check box.
14. Click **Next**.
15. Click **Next**.

16. Restart your computer so the new settings take effect.

To uninstall the Space Saver application for Windows 98:

1. On the Taskbar, click **Start**.
2. Select **Settings**; then, click **Control Panel**.
3. Double-click **Add/Remove Programs**.
4. Select **IBM TrackPoint Keyboard Support** from the displayed list and click **Add/Remove** to uninstall the application.
5. Click **OK**; then restart your computer so the new settings take effect.

Uninstalling the device driver for Windows 95 or Windows NT 4.0

Before you uninstall the Space Saver application in Windows 95 or Windows NT 4.0, replace it with the standard mouse device driver using the following instructions:

1. On the Taskbar, click **Start**.
2. Select **Settings**; then, click **Control Panel**.
3. Double-click the **Mouse** icon to open **Mouse Properties**.
4. Click the **General** tab in the Mouse Properties window.
5. Click **Change**.
6. Click to place a check in the **Show all devices** check box.
7. On the left side under Manufacturers, select **(Standard mouse types)**.
8. On the right side, select **Standard PS/2 Port Mouse**.
9. Click **OK**.
10. Click **Close** in the Mouse Properties window.
11. Restart your computer so the new settings take effect.

To uninstall the Space Saver application for Windows 95 or Windows NT 4.0:

1. On the Taskbar, click **Start**.
2. Select **Settings**; then, click **Control Panel**.
3. Double-click **Add/Remove Programs**.
4. Select **IBM TrackPoint Keyboard Support** from the displayed list and click **Add/Remove** to uninstall the application.
5. Click **OK**; then restart your computer so the new settings take effect.

Uninstalling the device driver for OS/2 Version 4

To uninstall the device driver for OS/2 Version 4:

1. Start OS/2.
2. Insert the Space Saver Keyboard software CD into the CD-ROM drive.
3. Double-click **OS/2 System** on the Desktop.
4. Double-click **Command Prompts**.
5. Double-click **OS/2 Window**.
6. At the **C:** prompt, type `X:\OS2\install` where *X* is the drive letter of your CD-ROM drive and press Enter.
7. Follow the on-screen instructions.
8. Click to place a check in the **Delete the installed product and re-install** check box in the Installation Options window, and click **Continue**.

9. Select **TrackPoint Support** and click **Delete**.
10. Restart your computer to activate the changes.

Product registration

Thank you for purchasing OPTIONS by IBM . Please take a few moments to register your product and provide us with information that will help IBM to better serve you in the future. Your feedback is valuable to us in developing products and services that are important to you, as well as in developing better ways to communicate with you. Register your option on the IBM Web site at:

http://www.pc.ibm.com/register

IBM will send you information and updates on your registered product unless you indicate on the Web site questionnaire that you do not want to receive further information.

Product service and warranty information

For technical support, support hours, and warranty terms and conditions, see the enclosed inserts, or contact your IBM reseller or IBM marketing representative.

You can also find product warranty information on the Space Saver Keyboard software CD. To open the product warranty file on the software CD:

Note: These instructions might vary depending on the browser software you are using.

1. Open your Internet browser software.
2. Click the **File** menu and select **Open File in Browser**.
3. In the dialog box, locate the CD-ROM drive.
4. You will see a folder and the WELCOME.HTML file. Click the WELCOME.HTML file to select it.
5. Click **OK** to open the file in your browser.
6. To return to your designated home page, close the browser or click the **Home** button .

For information on how to obtain online and technical support, see Appendix B, “Help and service information” on page 3-2.

Part 2: User's guide

Using the Space Saver keyboard

This section contains information on using the Space Saver keyboard.

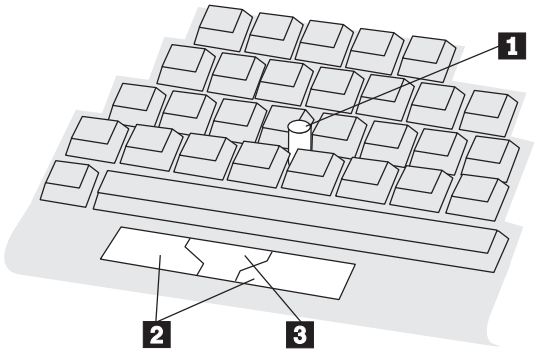

The main features of the Space Saver keyboard are:

A TrackPoint stick 1 near the center of the keyboard.

Three buttons at the bottom of the keyboard.

- The left and right buttons 2 are equivalent to left and right mouse buttons.
- The middle button 3 can be used with the TrackPoint pointing device to scroll.

Press-to-Select

If Press-to-Select is enabled, you can select an object by pressing down on top of the TrackPoint stick rather than using a left or right mouse button.

Third-button scrolling

If third-button scrolling is enabled, you can use the middle button and the TrackPoint stick to scroll in many software applications. (Third-button scrolling might not work in some software applications.)

Note: The Press-to-Select and third-button scrolling functions are supported only if the device drivers that came with the keyboard are installed.

Copyright IBM Corp. 1999

Using the TrackPoint pointing device

The TrackPoint pointing device is very easy to use. The following instructions will help you get started.

1. Place your hands in the typing position. Place either index finger on the stick. Rest your thumbs comfortably above the buttons.
2. Press gently on the stick, in the direction you want the pointer to move: away from you to move up the screen and toward you to move down the screen. Think of the stick as an extension of your finger. Press down only enough to keep your finger from slipping. Remember that the stick *does not* move.
3. Find a movement speed that you can control. Do not press too hard or the pointer will move too quickly.
4. Move the pointer slowly and directly to the target.
5. With your thumbs, use the buttons to select and drag as required by your software, just as with any other pointing device.
6. Press down or tap lightly on the stick top to select an object if Press-to-Select is enabled.

Customizing your TrackPoint pointing device

The TrackPoint Press-to-Select and third-button scrolling functions are enabled through the TrackPoint Properties window.

To open the TrackPoint Properties window:

In Windows 98, Windows 95, or Windows NT 4.0

Click the **TrackPoint** icon in the Sys tray on the lower right-hand corner of the desktop.

or

1. Click **Start**.
2. Select **Settings**; then click **Control Panel**.
3. Double-click the **TrackPoint** icon.

In OS/2 Version 4

1. Double-click **OS/2 System** on the Desktop.
2. Double-click **System Setup**.
3. Double-click the **TrackPoint** icon.

Notes:

1. The screen instructions in the OS/2 Version 4 operating system will be slightly different from the instructions in this section. However, OS/2 Version 4 supports all of the following functions.
2. You must click **OK** or **Apply** for new settings to take effect.

Enabling Press-to-Select

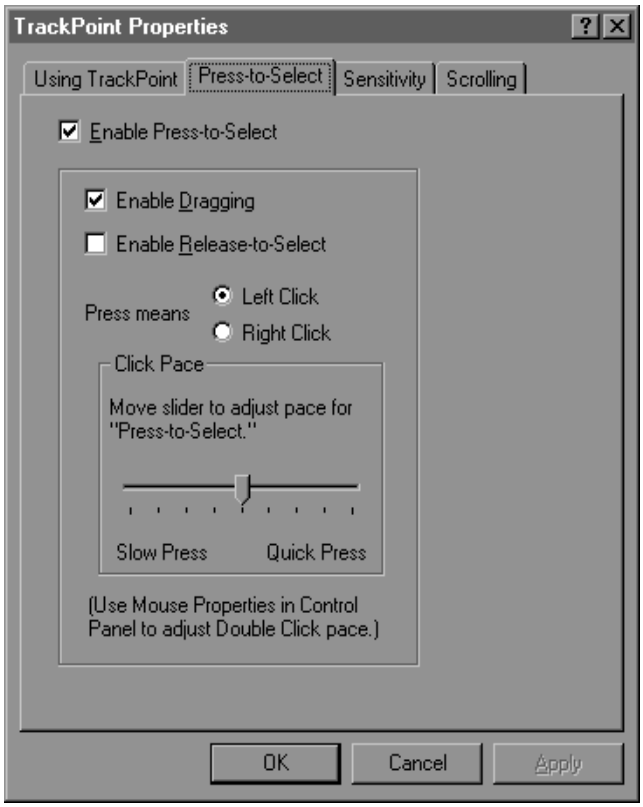

When Press-to-Select is enabled, you can select an object by pressing down on the top of the TrackPoint stick. Under the **Press-to-Select** tab, click to place a check in the **Enable Press-to-Select** check box. The Press-to-Select function can also be enabled for dragging and Release-to-Select. To enable dragging or Release-to-Select, click to place a check in the appropriate check box.

Enabling dragging

When this function is enabled, you can drag and drop with Press-to-Select. Press down on the TrackPoint stick to grab the object. Then, drag the object by moving the TrackPoint stick. Drop the object by releasing the TrackPoint stick.

Enabling Release-to-Select

When this function is enabled, you can click simply by lifting your finger quickly off the TrackPoint stick. Release-to-Select can also help you make a double-click. When you move the pointer onto an icon, and then lift your finger off the TrackPoint stick, one click is made (Release-to-Select). Then, when you press the TrackPoint stick again, the second click is made. The result is a double-click.

You can use the slider to choose a comfortable pointer speed for Press-to-Select.

Adjusting sensitivity

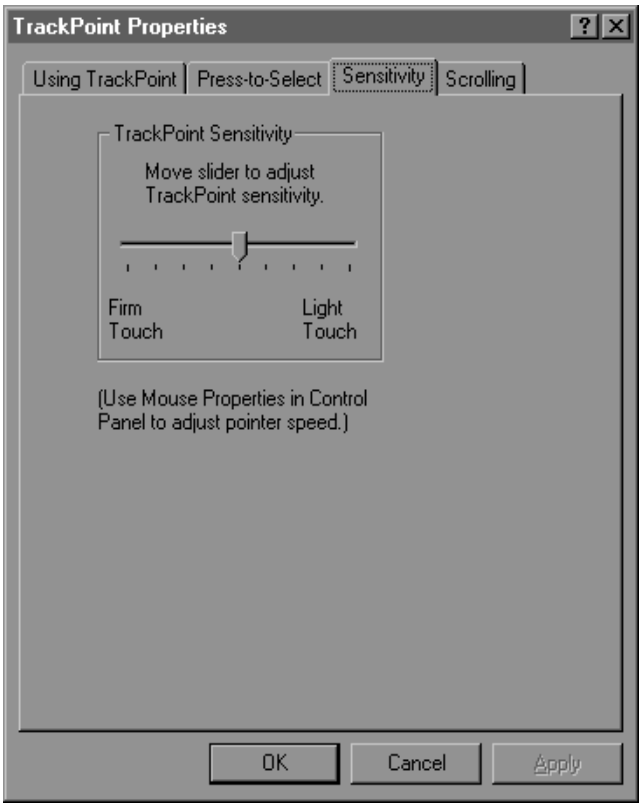

To adjust the sensitivity of the TrackPoint pointing device, click the **Sensitivity** tab. Use the slider to adjust the setting between **Firm Touch** and **Light Touch**. Slide toward **Firm Touch** to increase the force needed to move the pointer, and to increase the force needed to activate Press-to-Select. Slide toward **Light Touch** to decrease the force needed to activate Press-to-Select.

Enabling scrolling

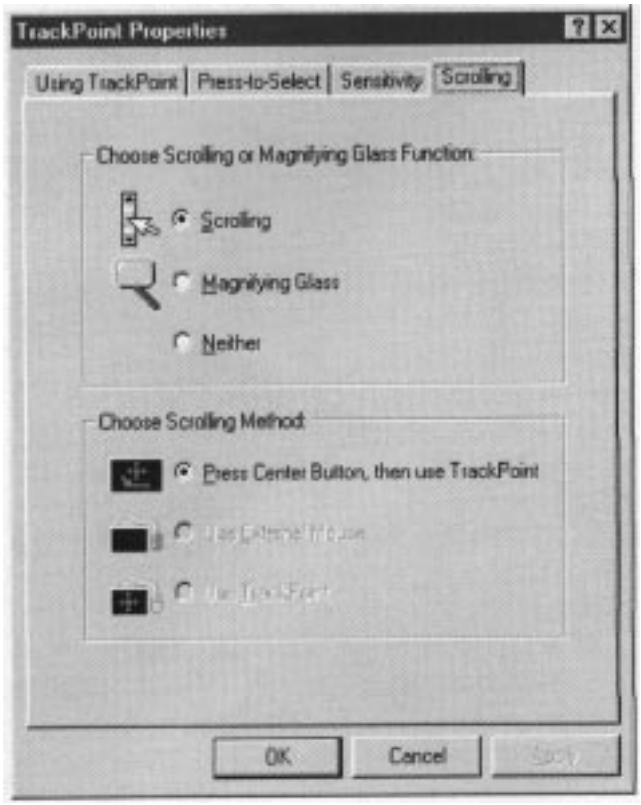

To enable a scrolling function, click the **Scrolling** tab in the TrackPoint Properties window and click **Scrolling** or **Magnifying Glass**. You cannot enable **Scrolling** and **Magnifying Glass** at the same time. Click **Neither** to disable Scrolling and Magnifying Glass.

Scrolling

When Scrolling is enabled, you can navigate with a press of a button through long documents or large spreadsheets. Instead of using scroll bars, you can choose one of the alternate scrolling methods listed in “Selecting a scrolling method” on page 2-6.

Magnifying Glass

When Magnifying Glass is enabled, you can enlarge a movable area of your display. Press the middle button, and then use the TrackPoint stick to move the Magnifying Glass. You can click objects “through” the Magnifying Glass. To change the size of the Magnifying Glass, hold down the middle button and press the right button. To change the magnifying power, hold down the middle button and press the left button.

Selecting a scrolling method

If you enable Scrolling, you must select one of the following scrolling methods under the **Scrolling** tab.

Press Middle Button, then use TrackPoint

When this scrolling method is selected, you can scroll by pressing the middle button and moving the TrackPoint stick.

Use External Mouse

When this scrolling method is selected, you can scroll with an external mouse.

Use TrackPoint.

When this scrolling method is selected, you can scroll with the TrackPoint stick.

Adjusting mouse properties in Windows 98, Windows 95, or Windows NT 4.0

To adjust button configuration, double-click speed, pointer speed, or pointer trails in Windows 98, Windows 95, or Windows NT 4.0:

1. Click **Start**.
2. Select **Settings**; then, click **Control Panel**.
3. Double-click the **Mouse** icon (**Mouse Properties**).

Note: After you make changes on any screen in Mouse Properties in Windows 98, Windows 95, or Windows NT 4.0, be sure to click **OK** or **Apply** to activate your changes.

If you are using OS/2 or Windows 3.1, consult your operating system *User's Guide* for instructions on adjusting mouse properties.

Using the embedded numeric keypad

You can activate the numeric characters shown on the front of the keys on the right side of the keyboard by pressing the Shift key and the Nm Lk (Num Lock)/Sc Lk (Scroll Lock) key at the same time.

You might want to change to default the Num Lock to OFF at computer startup. To change the Num Lock default on most Netfinity servers:

1. Press F1 during computer startup.
2. From the **Main** menu, select **Boot Options**.
3. Turn Num Lock OFF.

Other IBM computer systems use similar procedures for changing defaults at startup. For more information on changing defaults, refer to the documentation that comes with your computer.

Maintaining the Space Saver keyboard

This section provides maintenance guidelines for your Space Saver keyboard.

Cleaning: To clean the keyboard surface, wipe it with a soft cloth moistened with water or rubbing alcohol. You might also gently vacuum it or dust it with a small brush. Do not allow water or other liquids to get inside the keyboard.

Replacing the cap: When the cap on the end of the stick is worn out, pull the cap straight off (do not twist) and replace it with a new one. Spare caps are supplied with this option package. You can purchase additional caps by calling IBM PC Direct at 1-800-PC-DIRECT.

Carefully handling the keyboard and TrackPoint stick: Avoid dropping the keyboard or striking the TrackPoint stick with a heavy force. These actions might damage the keyboard or the stick.

Part 3: Appendixes

Appendix A. Problem solving

Computer problems can be caused by hardware, software, or user error. You might be able to use the information in this section to solve problems yourself, or gather helpful information you can pass on to a service technician.

Review the following list for any problem descriptions that might fit your situation.

The pointer is moving erratically.

Other equipment might cause electronic interference that hinders the operation of the keyboard pointing device. Relocate the equipment or move your computer. If the problem continues, refer to Appendix B, "Help and service information" on page 3-2.

The keyboard is not detected on boot up (301 error).

Take the following actions:

1. Verify that the keyboard and mouse connectors are not reversed when plugged into the computer.
2. Replug both connections.

The computer screen displays characters that do not match the keys that are pressed.

Be sure that the Nm Lk (Num Lock) key is off. For more information on changing the Num Lock default to OFF, see "Using the embedded numeric keypad" on page 2-6.

Moving the TrackPoint stick does not move the cursor.

Take the following actions:

1. Check that the mouse connector from the keyboard to the computer is properly plugged in.
2. If you are using a ThinkPad 600, 770, 390, i-series, or other late model ThinkPad notebook computer, be sure that you have autodisabled your onboard TrackPoint pointing device. For more information on disabling the onboard TrackPoint pointing device, see "When to disable the ThinkPad onboard pointing device" on page 1-4.

Copyright IBM Corp. 1999

Scrolling does not work.

Take the following actions:

1. Verify that the TrackPoint device driver has been installed. Select **Mouse** in the Device Manager window and check that the TrackPoint device driver is listed. If you do not see the TrackPoint device driver, reinstall the driver using instructions given in “Installing Space Saver software” on page 1-5.
2. Check that scrolling is enabled using third button by clicking the **Scrolling** tab in the TrackPoint Properties window. If some applications scroll and others do not, some of your applications do not support scrolling.

Press-to-Select does not work.

Take the following actions:

1. Verify that the TrackPoint device driver has been installed. Select **Mouse** in the Device Manager window and check that the TrackPoint device driver is listed. If you do not see the TrackPoint device driver, reinstall the driver using instructions given in “Installing Space Saver software” on page 1-5.
2. Check that Press-to-Select is enabled on the **Press-to-Select** tab in the TrackPoint Properties application.
3. Try adjusting the Click Pace in the **Press-to-Select** tab and the Sensitivity slider in the **Sensitivity** tab. A harder tap might be needed to activate Press-to-Select.

The cursor moves when you are not touching the TrackPoint stick.

This movement might occur if the keyboard is close to an electromagnetic source such as a computer monitor, or if the keyboard is being flexed. Try moving the keyboard to a different location.

You cannot locate the TrackPoint pointer on the screen.

Take the following actions:

1. Use the **Mouse Properties** icon to enable pointer trails.
2. Try moving the TrackPoint stick in one direction for several seconds. Look to that side of the screen, then move the TrackPoint stick in the opposite direction. The cursor will appear on that side of the screen.

Appendix B. Help and service information

See Appendix A, “Problem solving” on page 3-1 before requesting help or service. This section contains information on how to obtain online and telephone technical support.

Online technical support

Online technical support is available during the life of your product. Online assistance can be obtained through the Personal Computing Support Web site, the PSG Electronic Bulletin Board System, and the IBM Automated Fax System.

Online technical support	
IBM Personal Computing Support Web Site	http://www.pc.ibm.com/support
IBM PSG BBS	1-919-517-0001
IBM Automated Fax System	1-800-426-3395 1-800-465-3299 (in Canada)

During the warranty period, assistance for replacement or exchange of defective components is available. In addition, if your IBM option is installed in an IBM computer, you might be entitled to service at your location. Your technical support representative can help you determine the best alternative.

Telephone technical support

Marketing, installation, and configuration support through the HelpCenter will be withdrawn or made available for a fee, at IBM's discretion, 90 days after the option has been withdrawn from marketing. Additional support offerings, including step-by-step installation assistance, are available for a nominal fee.

To assist the technical support representative, have available as much of the following information as possible:

1. Option name
2. Option number
3. Proof of purchase
4. Computer manufacturer, model, serial number (if IBM), and manual
5. Exact wording of the error message (if any)
6. Description of the problem
7. Hardware and software configuration information for your system

If possible, be at your computer. Your technical support representative might want to walk you through the problem during the call.

For the support telephone number and support hours by country, refer to the following table or to the enclosed technical support insert. If the number is not provided, contact your IBM reseller or IBM marketing representative. Response time may vary depending on the number and nature of the calls received.

Support 24 hours a day, 7 days a week	
Canada	1-800-565-3344
U.S.A./Puerto Rico	1-800-772-2227

Appendix C. Product warranty and notices

Warranty Statements

The warranty statements consist of two parts: Part 1 and Part 2. Part 1 varies by country. Part 2 is the same for both statements. Be sure to read both the Part 1 that applies to your country and Part 2.

United States, Puerto Rico, and Canada (Z125-4753-05 11/97)
(Part 1 - General Terms on page 3-4)
Worldwide except Canada, Puerto Rico, Turkey, and United States (Z125-5697-01 11/97)
(Part 1 - General Terms on page 3-7)
Worldwide Country-Unique Terms
(Part 2 - Country-Unique Terms on page 3-9)

IBM Statement of Limited Warranty for United States, Puerto Rico, and Canada (Part 1 - General Terms)

This Statement of Limited Warranty includes Part 1 - General Terms and Part 2 - Country-unique Terms. **The terms of Part 2 may replace or modify those of Part 1**. *The warranties provided by IBM in this Statement of Limited Warranty apply only to Machines you purchase for your use, and not for resale, from IBM or your reseller. The term "Machine" means an IBM machine, its features, conversions, upgrades, elements, or accessories, or any combination of them. The term "Machine" does not include any software programs, whether pre-loaded with the Machine, installed subsequently or otherwise. Unless IBM specifies otherwise, the following warranties apply only in the country where you acquire the Machine. Nothing in this Statement of Warranty affects any statutory rights of consumers that cannot be waived or limited by contract. If you have any questions, contact IBM or your reseller.*

Machine - Space Saver Keyboard

Warranty Period* - One Year

**Contact your place of purchase for warranty service information. Some IBM Machines are eligible for On-site warranty service depending on the country where service is performed.*

The IBM Warranty for Machines

IBM warrants that each Machine 1) is free from defects in materials and workmanship and 2) conforms to IBM's Official Published Specifications. The warranty period for a Machine is a specified, fixed period commencing on its Date of Installation. The date on your sales receipt is the Date of Installation, unless IBM or your reseller informs you otherwise.

During the warranty period IBM or your reseller, if approved by IBM to provide warranty service, will provide repair and exchange service for the Machine, without charge, under the type of service designated for the Machine and will manage and install engineering changes that apply to the Machine.

If a Machine does not function as warranted during the warranty period, and IBM or your reseller are unable to either 1) make it do so or 2) replace it with one that is at least functionally

equivalent, you may return it to your place of purchase and your money will be refunded. The replacement may not be new, but will be in good working order.

Extent of Warranty
The warranty does not cover the repair or exchange of a Machine resulting from misuse, accident, modification, unsuitable physical or operating environment, improper maintenance by you, or failure caused by a product for which IBM is not responsible. The warranty is voided by removal or alteration of Machine or parts identification labels.

THESE WARRANTIES ARE YOUR EXCLUSIVE WARRANTIES AND REPLACE ALL OTHER WARRANTIES OR CONDITIONS, EXPRESS OR IMPLIED, INCLUDING, BUT NOT LIMITED TO, THE IMPLIED WARRANTIES OR CONDITIONS OF MERCHANTABILITY AND FITNESS FOR A PARTICULAR PURPOSE. THESE WARRANTIES GIVE YOU SPECIFIC LEGAL RIGHTS AND YOU MAY ALSO HAVE OTHER RIGHTS WHICH VARY FROM JURISDICTION TO JURISDICTION. SOME JURISDICTIONS DO NOT ALLOW THE EXCLUSION OR LIMITATION OF EXPRESS OR IMPLIED WARRANTIES, SO THE ABOVE EXCLUSION OR LIMITATION MAY NOT APPLY TO YOU. IN THAT EVENT, SUCH WARRANTIES ARE LIMITED IN DURATION TO THE WARRANTY PERIOD. NO WARRANTIES APPLY AFTER THAT PERIOD.

Items Not Covered by Warranty
IBM does not warrant uninterrupted or error-free operation of a Machine.

Unless specified otherwise, IBM provides non-IBM machines **WITHOUT WARRANTIES OF ANY KIND.**

Any technical or other support provided for a Machine under warranty, such as assistance via telephone with "how-to" questions and those regarding Machine set-up and installation, will be provided **WITHOUT WARRANTIES OF ANY KIND.**

Warranty Service
To obtain warranty service for the Machine, contact your reseller or IBM. In the United States, call IBM at 1-800-772-2227. In Canada, call IBM at 1-800-565-3344. You may be required to present proof of purchase.

IBM or your reseller provides certain types of repair and exchange service, either at your location or at a service center, to keep Machines in, or restore them to, conformance with their Specifications. IBM or your reseller will inform you of the available types of service for a Machine based on its country of installation. IBM may repair the failing Machine or exchange it at its discretion.

When warranty service involves the exchange of a Machine or part, the item IBM or your reseller replaces becomes its property and the replacement becomes yours. You represent that all removed items are genuine and unaltered. The replacement may not be new, but will be in good working order and at least functionally equivalent to the item replaced. The replacement assumes the warranty service status of the replaced item.

Any feature, conversion, or upgrade IBM or your reseller services must be installed on a Machine which is 1) for certain Machines, the designated, serial-numbered Machine and 2) at an engineering-change level compatible with the feature, conversion, or upgrade. Many features, conversions, or upgrades involve the removal of parts and their return to IBM. A part that replaces a removed part will assume the warranty service status of the removed part.

Before IBM or your reseller exchanges a Machine or part, you agree to remove all features, parts, options, alterations, and attachments not under warranty service.

You also agree to

1. ensure that the Machine is free of any legal obligations or restrictions that prevent its exchange;
2. obtain authorization from the owner to have IBM or your reseller service a Machine that you do not own; and
3. where applicable, before service is provided
   a. follow the problem determination, problem analysis, and service request procedures that IBM or your reseller provides,
   b. secure all programs, data, and funds contained in a Machine,
   c. provide IBM or your reseller with sufficient, free, and safe access to your facilities to permit them to fulfill their obligations, and
   d. inform IBM or your reseller of changes in a Machine's location.

IBM is responsible for loss of, or damage to, your Machine while it is 1) in IBM's possession or 2) in transit in those cases where IBM is responsible for the transportation charges.

Neither IBM nor your reseller is responsible for any of your confidential, proprietary or personal information contained in a Machine which you return to IBM or your reseller for any reason. You should remove all such information from the Machine prior to its return.

Production Status
Each IBM Machine is manufactured from new parts, or new and used parts. In some cases, the Machine may not be new and may have been previously installed. Regardless of the Machine's production status, IBM's appropriate warranty terms apply.

Limitation of Liability
Circumstances may arise where, because of a default on IBM's part or other liability, you are entitled to recover damages from IBM. In each such instance, regardless of the basis on which you are entitled to claim damages from IBM (including fundamental breach, negligence, misrepresentation, or other contract or tort claim), IBM is liable for no more than

1. damages for bodily injury (including death) and damage to real property and tangible personal property; and

2. the amount of any other actual direct damages, up to the greater of U.S. $100,000 (or equivalent in local currency) or the charges (if recurring, 12 months' charges apply) for the Machine that is the subject of the claim.

   This limit also applies to IBM's suppliers and your reseller. It is the maximum for which IBM, its suppliers, and your reseller are collectively responsible.

UNDER NO CIRCUMSTANCES IS IBM LIABLE FOR ANY OF THE FOLLOWING: 1) THIRD-PARTY CLAIMS AGAINST YOU FOR DAMAGES (OTHER THAN THOSE UNDER THE FIRST ITEM LISTED ABOVE); 2) LOSS OF, OR DAMAGE TO, YOUR RECORDS OR DATA; OR 3) SPECIAL, INCIDENTAL, OR INDIRECT DAMAGES OR FOR ANY ECONOMIC CONSEQUENTIAL DAMAGES (INCLUDING LOST PROFITS OR SAVINGS), EVEN IF IBM, ITS SUPPLIERS OR YOUR RESELLER IS INFORMED OF THEIR POSSIBILITY. SOME JURISDICTIONS DO NOT ALLOW THE EXCLUSION OR LIMITATION OF INCIDENTAL OR CONSEQUENTIAL DAMAGES, SO THE ABOVE LIMITATION OR EXCLUSION MAY NOT APPLY TO YOU.

IBM Statement of Warranty Worldwide except Canada, Puerto Rico, Turkey, United States (Part 1 - General Terms)

This Statement of Warranty includes Part 1 - General Terms and Part 2 - Country-unique Terms. **The terms of Part 2 may replace or modify those of Part 1**. *The warranties provided by IBM in this Statement of Warranty apply only to Machines you purchase for your use, and not for resale, from IBM or your reseller. The term "Machine" means an IBM machine, its features, conversions, upgrades, elements, or accessories, or any combination of them. The term "Machine" does not include any software programs, whether pre-loaded with the Machine, installed subsequently or otherwise. Unless IBM specifies otherwise, the following warranties apply only in the country where you acquire the Machine. Nothing in this Statement of Warranty affects any statutory rights of consumers that cannot be waived or limited by contract. If you have any questions, contact IBM or your reseller.*

Machine - Space Saver Keyboard

Warranty Period* - One Year

**Contact your place of purchase for warranty service information. Some IBM Machines are eligible for On-site warranty service depending on the country where service is performed.*

The IBM Warranty for Machines

IBM warrants that each Machine 1) is free from defects in materials and workmanship and 2) conforms to IBM's Official Published Specifications. The warranty period for a Machine is a specified, fixed period commencing on its Date of Installation. The date on your sales receipt is the Date of Installation, unless IBM or your reseller informs you otherwise.

During the warranty period IBM or your reseller, if approved by IBM to provide warranty service, will provide repair and exchange service for the Machine, without charge, under the type of service designated for the Machine and will manage and install engineering changes that apply to the Machine.

If a Machine does not function as warranted during the warranty period, and IBM or your reseller are unable to either 1) make it do so or 2) replace it with one that is at least functionally equivalent, you may return it to your place of purchase and your money will be refunded. The replacement may not be new, but will be in good working order.

Extent of Warranty

The warranty does not cover the repair or exchange of a Machine resulting from misuse, accident, modification, unsuitable physical or operating environment, improper maintenance by you, or failure caused by a product for which IBM is not responsible. The warranty is voided by removal or alteration of Machine or parts identification labels.

THESE WARRANTIES ARE YOUR EXCLUSIVE WARRANTIES AND REPLACE ALL OTHER WARRANTIES OR CONDITIONS, EXPRESS OR IMPLIED, INCLUDING, BUT NOT LIMITED TO, THE IMPLIED WARRANTIES OR CONDITIONS OF MERCHANTABILITY AND FITNESS FOR A PARTICULAR PURPOSE. THESE WARRANTIES GIVE YOU SPECIFIC LEGAL RIGHTS AND YOU MAY ALSO HAVE OTHER RIGHTS WHICH VARY FROM JURISDICTION TO JURISDICTION. SOME JURISDICTIONS DO NOT ALLOW THE EXCLUSION OR LIMITATION OF EXPRESS OR IMPLIED WARRANTIES, SO THE ABOVE EXCLUSION OR

LIMITATION MAY NOT APPLY TO YOU. IN THAT EVENT, SUCH WARRANTIES ARE LIMITED IN DURATION TO THE WARRANTY PERIOD. NO WARRANTIES APPLY AFTER THAT PERIOD.

Items Not Covered by Warranty

IBM does not warrant uninterrupted or error-free operation of a Machine.

Unless specified otherwise, IBM provides non-IBM machines **WITHOUT WARRANTIES OF ANY KIND.**

Any technical or other support provided for a Machine under warranty, such as assistance via telephone with "how-to" questions and those regarding Machine set-up and installation, will be provided **WITHOUT WARRANTIES OF ANY KIND.**

Warranty Service

To obtain warranty service for the Machine, contact your reseller or IBM. You may be required to present proof of purchase.

IBM or your reseller provides certain types of repair and exchange service, either at your location or at a service center, to keep Machines in, or restore them to, conformance with their Specifications. IBM or your reseller will inform you of the available types of service for a Machine based on its country of installation. IBM may repair the failing Machine or exchange it at its discretion.

When warranty service involves the exchange of a Machine or part, the item IBM or your reseller replaces becomes its property and the replacement becomes yours. You represent that all removed items are genuine and unaltered. The replacement may not be new, but will be in good working order and at least functionally equivalent to the item replaced. The replacement assumes the warranty service status of the replaced item.

Any feature, conversion, or upgrade IBM or your reseller services must be installed on a Machine which is 1) for certain Machines, the designated, serial-numbered Machine and 2) at an engineering-change level compatible with the feature, conversion, or upgrade. Many features, conversions, or upgrades involve the removal of parts and their return to IBM. A part that replaces a removed part will assume the warranty service status of the removed part.

Before IBM or your reseller exchanges a Machine or part, you agree to remove all features, parts, options, alterations, and attachments not under warranty service.

You also agree to

1. ensure that the Machine is free of any legal obligations or restrictions that prevent its exchange;
2. obtain authorization from the owner to have IBM or your reseller service a Machine that you do not own; and
3. where applicable, before service is provided
   a. follow the problem determination, problem analysis, and service request procedures that IBM or your reseller provides,
   b. secure all programs, data, and funds contained in a Machine,
   c. provide IBM or your reseller with sufficient, free, and safe access to your facilities to permit them to fulfil their obligations, and
   d. inform IBM or your reseller of changes in a Machine's location.

IBM is responsible for loss of, or damage to, your Machine while it is 1) in IBM's possession or 2) in transit in those cases where IBM is responsible for the transportation charges.

Neither IBM nor your reseller is responsible for any of your confidential, proprietary or personal information contained in a Machine which you return to IBM or your reseller for any reason. You should remove all such information from the Machine prior to its return.

Production Status
Each IBM Machine is manufactured from new parts, or new and used parts. In some cases, the Machine may not be new and may have been previously installed. Regardless of the Machine's production status, IBM's appropriate warranty terms apply.

Limitation of Liability
Circumstances may arise where, because of a default on IBM's part or other liability, you are entitled to recover damages from IBM. In each such instance, regardless of the basis on which you are entitled to claim damages from IBM (including fundamental breach, negligence, misrepresentation, or other contract or tort claim), IBM is liable for no more than

1. damages for bodily injury (including death) and damage to real property and tangible personal property; and
2. the amount of any other actual direct damages, up to the greater of U.S. $100,000 (or equivalent in local currency) or the charges (if recurring, 12 months' charges apply) for the Machine that is the subject of the claim.

   This limit also applies to IBM's suppliers and your reseller. It is the maximum for which IBM, its suppliers, and your reseller are collectively responsible.

UNDER NO CIRCUMSTANCES IS IBM LIABLE FOR ANY OF THE FOLLOWING: 1) THIRD-PARTY CLAIMS AGAINST YOU FOR DAMAGES (OTHER THAN THOSE UNDER THE FIRST ITEM LISTED ABOVE); 2) LOSS OF, OR DAMAGE TO, YOUR RECORDS OR DATA; OR 3) SPECIAL, INCIDENTAL, OR INDIRECT DAMAGES OR FOR ANY ECONOMIC CONSEQUENTIAL DAMAGES (INCLUDING LOST PROFITS OR SAVINGS), EVEN IF IBM, ITS SUPPLIERS OR YOUR RESELLER IS INFORMED OF THEIR POSSIBILITY. SOME JURISDICTIONS DO NOT ALLOW THE EXCLUSION OR LIMITATION OF INCIDENTAL OR CONSEQUENTIAL DAMAGES, SO THE ABOVE LIMITATION OR EXCLUSION MAY NOT APPLY TO YOU.

Part 2 - Worldwide Country-Unique Terms

ASIA PACIFIC

AUSTRALIA: The IBM Warranty for Machines: The following paragraph is added to this Section:
The warranties specified in this Section are in addition to any rights you may have under the Trade Practices Act 1974 or other legislation and are only limited to the extent permitted by the applicable legislation.

Extent of Warranty: The following replaces the first and second sentences of this Section:
The warranty does not cover the repair or exchange of a Machine resulting from misuse, accident, modification, unsuitable physical or operating environment, operation in other than the Specified Operating Environment, improper maintenance by you, or failure caused by a product for which IBM is not responsible.

Limitation of Liability: The following is added to this Section:

Where IBM is in breach of a condition or warranty implied by the Trade Practices Act 1974, IBM's liability is limited to the repair or replacement of the goods or the supply of equivalent goods. Where that condition or warranty relates to right to sell, quiet possession or clear title, or the goods are of a kind ordinarily acquired for personal, domestic or household use or consumption, then none of the limitations in this paragraph apply.

PEOPLE'S REPUBLIC OF CHINA: Governing Law: The following is added to this Statement:
The laws of the State of New York govern this Statement.

INDIA: Limitation of Liability: The following replaces items 1 and 2 of this Section:
1. liability for bodily injury (including death) or damage to real property and tangible personal property will be limited to that caused by IBM's negligence;
2. as to any other actual damage arising in any situation involving nonperformance by IBM pursuant to, or in any way related to the subject of this Statement of Warranty, IBM's liability will be limited to the charge paid by you for the individual Machine that is the subject of the claim.

NEW ZEALAND: The IBM Warranty for Machines: The following paragraph is added to this Section:
The warranties specified in this Section are in addition to any rights you may have under the Consumer Guarantees Act 1993 or other legislation which cannot be excluded or limited. The Consumer Guarantees Act 1993 will not apply in respect of any goods which IBM provides, if you require the goods for the purposes of a business as defined in that Act.

Limitation of Liability: The following is added to this Section:
Where Machines are not acquired for the purposes of a business as defined in the Consumer Guarantees Act 1993, the limitations in this Section are subject to the limitations in that Act.

EUROPE, MIDDLE EAST, AFRICA (EMEA)

The following terms apply to all EMEA countries.

The terms of this Statement of Warranty apply to Machines purchased from an IBM reseller. If you purchased this Machine from IBM, the terms and conditions of the applicable IBM agreement prevail over this warranty statement.

Warranty Service
If you purchased an IBM Machine in Austria, Belgium, Denmark, Estonia, Finland, France, Germany, Greece, Iceland, Ireland, Italy, Latvia, Lithuania, Luxembourg, Netherlands, Norway, Portugal, Spain, Sweden, Switzerland or United Kingdom, you may obtain warranty service for that Machine in any of those countries from either (1) an IBM reseller approved to perform warranty service or (2) from IBM.

If you purchased an IBM Personal Computer Machine in Albania, Armenia, Belarus, Bosnia and Herzegovina, Bulgaria, Croatia, Czech Republic, Georgia, Hungary, Kazakhstan, Kirghizia, Federal Republic of Yugoslavia, Former Yugoslav Republic of Macedonia (FYROM), Moldova, Poland, Romania, Russia, Slovak Republic, Slovenia, or Ukraine, you may obtain warranty service for that Machine in any of those countries from either (1) an IBM reseller approved to perform warranty service or (2) from IBM.

The applicable laws, Country-unique terms and competent court for this Statement are those of the country in which the warranty service is being provided. However, the laws of Austria govern this Statement if the warranty service is provided in Albania, Armenia, Belarus, Bosnia and Herzegovina, Bulgaria, Croatia, Czech Republic, Federal Republic of Yugoslavia, Georgia, Hungary, Kazakhstan, Kirghizia, Former Yugoslav Republic of Macedonia (FYROM), Moldova, Poland, Romania, Russia, Slovak Republic, Slovenia, and Ukraine.

The following terms apply to the country specified:

EGYPT: Limitation of Liability: The following replaces item 2 in this Section:
2. as to any other actual direct damages, IBM's liability will be limited to the total amount you paid for the Machine that is the subject of the claim.

Applicability of suppliers and resellers (unchanged).

FRANCE: Limitation of Liability: The following replaces the second sentence of the first paragraph of this Section:
In such instances, regardless of the basis on which you are entitled to claim damages from IBM, IBM is liable for no more than: (items 1 and 2 unchanged).

GERMANY: The IBM Warranty for Machines: The following replaces the first sentence of the first paragraph of this Section:
The warranty for an IBM Machine covers the functionality of the Machine for its normal use and the Machine's conformity to its Specifications.

The following paragraphs are added to this Section:
The minimum warranty period for Machines is six months.

In case IBM or your reseller are unable to repair an IBM Machine, you can alternatively ask for a partial refund as far as justified by the reduced value of the unrepaired Machine or ask for a cancellation of the respective agreement for such Machine and get your money refunded.

Extent of Warranty: The second paragraph does not apply.

Warranty Service: The following is added to this Section:
During the warranty period, transportation for delivery of the failing Machine to IBM will be at IBM's expense.

Production Status: The following paragraph replaces this Section:
Each Machine is newly manufactured. It may incorporate in addition to new parts, re-used parts as well.

Limitation of Liability: The following is added to this Section:
The limitations and exclusions specified in the Statement of Warranty will not apply to damages caused by IBM with fraud or gross negligence and for express warranty.

In item 2, replace “U.S. $100,000” with “1.000.000 DEM.”

The following sentence is added to the end of the first paragraph of item 2:
IBM's liability under this item is limited to the violation of essential contractual terms in cases of ordinary negligence.

IRELAND: Extent of Warranty: The following is added to this Section:
Except as expressly provided in these terms and conditions, all statutory conditions, including all warranties implied, but without prejudice to the generality of the foregoing all warranties implied by the Sale of Goods Act 1893 or the Sale of Goods and Supply of Services Act 1980 are hereby excluded.

Limitation of Liability: The following replaces items one and two of the first paragraph of this Section:
1. death or personal injury or physical damage to your real property solely caused by IBM's negligence; and 2. the amount of any other actual direct damages, up to the greater of Irish Pounds 75,000 or 125 percent of the charges (if recurring, the 12 months' charges apply) for the Machine that is the subject of the claim or which otherwise gives rise to the claim.

Applicability of suppliers and resellers (unchanged).

The following paragraph is added at the end of this Section:
IBM's entire liability and your sole remedy, whether in contract or in tort, in respect of any default shall be limited to damages.

ITALY: Limitation of Liability: The following replaces the second sentence in the first paragraph:
In each such instance unless otherwise provided by mandatory law, IBM is liable for no more than: (item 1 unchanged) 2)as to any other actual damage arising in all situations involving non-performance by IBM pursuant to, or in any way related to the subject matter of this Statement of Warranty, IBM's liability, will be limited to the total amount you paid for the Machine that is the subject of the claim.

Applicability of suppliers and resellers (unchanged).

The following replaces the second paragraph of this Section:
Unless otherwise provided by mandatory law, IBM and your reseller are not liable for any of the following: (items 1 and 2 unchanged) 3) indirect damages, even if IBM or your reseller is informed of their possibility.

SOUTH AFRICA, NAMIBIA, BOTSWANA, LESOTHO AND SWAZILAND: Limitation of Liability: The following is added to this Section:
IBM's entire liability to you for actual damages arising in all situations involving nonperformance by IBM in respect of the subject matter of this Statement of Warranty will be limited to the charge paid by you for the individual Machine that is the subject of your claim from IBM.

TURKIYE: Production Status: The following replaces this Section:
IBM fulfils customer orders for IBM Machines as newly manufactured in accordance with IBM's production standards.

UNITED KINGDOM: Limitation of Liability: The following replaces items 1 and 2 of the first paragraph of this Section:
1. death or personal injury or physical damage to your real property solely caused by IBM's negligence;
2. the amount of any other actual direct damages or loss, up to the greater of Pounds Sterling 150,000 or 125 percent of the charges (if recurring, the 12 months' charges apply) for the Machine that is the subject of the claim or which otherwise gives rise to the claim.

The following item is added to this paragraph:
3. breach of IBM's obligations implied by Section 12 of the Sale of Goods Act 1979 or Section 2 of the Supply of Goods and Services Act 1982.

Applicability of suppliers and resellers (unchanged).

The following is added to the end of this Section:
IBM's entire liability and your sole remedy, whether in contract or in tort, in respect of any default will be limited to damages.

NORTH AMERICA

CANADA: Warranty Service: The following is added to this Section:
To obtain warranty service from IBM, call **1-800-465-6666**.

UNITED STATES OF AMERICA: Warranty Service: The following is added to this Section:
To obtain warranty service from IBM, call **1-800-IBM-SERV**.

Notices

References in this publication to IBM products, programs, or services do not imply that IBM intends to make these available in all countries in which IBM operates. Any reference to an IBM product, program, or service is not intended to state or imply that only that IBM product, program, or service may be used. Subject to IBM's valid intellectual property or other legally protectable rights, any functionally equivalent product, program, or service may be used instead of the IBM product, program, or service. The evaluation and verification of operation in conjunction with other products, except those expressly designated by IBM, are the responsibility of the user.

IBM may have patents or pending patent applications covering subject matter in this document. The furnishing of this document does not give you any license to these patents. You can send license inquiries, in writing, to:

IBM Director of Licensing
IBM Corporation
North Castle Drive
Armonk, NY 10504-1785
U.S.A.

Any references in this publication to non-IBM Web sites are provided for convenience only and do not in any manner serve as an endorsement of those Web sites. The materials at those Web sites are not part of the materials for this IBM product and use of those Web sites is at your own risk.

Trademarks

The following terms are trademarks of the IBM Corporation in the United States or other countries or both:

HelpCenter	IBM	Netfinity
OS/2	ThinkPad	TrackPoint

Microsoft, Windows, and Windows NT are trademarks or registered trademarks of Microsoft Corporation in the United States or other countries or both.

PC Direct is a trademark of Ziff Communications Company in the United States or other countries or both.

Other company, product, or service names may be trademarks or service marks of others.

Electronic emission notices

Space Saver Keyboard

Federal Communications Commission (FCC) Statement

Note: This equipment has been tested and found to comply with the limits for a Class B digital device, pursuant to Part 15 of the FCC Rules. These limits are designed to provide reasonable protection against harmful interference in a residential installation. This equipment generates, uses, and can radiate radio frequency energy and, if not installed and used in accordance with the instructions, may cause harmful interference to radio communications. However, there is no guarantee that interference will not occur in a particular installation. If this equipment does cause harmful interference to radio or television reception, which can be determined by turning the equipment off and on, the user is encouraged to try to correct the interference by one or more of the following measures:

Reorient or relocate the receiving antenna.
Increase the separation between the equipment and receiver.
Connect the equipment into an outlet on a circuit different from that to which the receiver is connected.
Consult an IBM authorized dealer or service representative for help.

Properly shielded and grounded cables and connectors must be used in order to meet FCC emission limits. Proper cables and connectors are available from IBM authorized dealers. IBM is not responsible for any radio or television interference caused by using other than recommended cables and connectors or by unauthorized changes or modifications to this equipment. Unauthorized changes or modifications could void the user's authority to operate the equipment.

This device complies with Part 15 of the FCC Rules. Operation is subject to the following two conditions: (1) this device may not cause harmful interference, and (2) this device must accept any interference received, including interference that may cause undesired operation.

Responsible Party:

International Business Machines Corporation
New Orchard Road
Armonk, NY 10504
Telephone: 1-919-543-2193

Industry Canada Class B emission compliance statement

This Class B digital apparatus complies with Canadian ICES-003.

Avis de conformité à la réglementation d'Industrie Canada

Cet appareil numérique de la classe B est conform à la norme NMB-003 du Canada.

Deutsche EMV-Direktive (electromagnetische Verträglichkeit)

Dieses Gerät ist berechtigt in Übereinstimmung mit dem deutschen EMVG vom 9.Nov.92 das EG-Konformitätszeichen zu führen.

Der Aussteller der Konformitätserklärung ist die IBM UK, Greenock.

Dieses Gerät erfüllt die Bedingungen der EN 55022 Klasse B.

European Union - emission directive

This product is in conformity with the protection requirements of EU Council Directive 89/366/ECC on the approximation of the laws of the Member States relating to electromagnetic compatibility.

IBM can not accept responsibility for any failure to satisfy the protection requirements resulting from a non-recommended modification of the product, including the fitting of non-IBM option cards.

This product has been tested and found to comply with the limits for Class B Information Technology Equipment according to CISPR 22 / European Standard EN 55022. The limits for Class B equipment were derived for typical residential environments to provide reasonable protection against interference with licensed communication devices.

Union Européenne - Directive Conformité électromagnétique

Ce produit est conforme aux exigences de protection de la Directive 89/336/EEC du Conseil de l'UE sur le rapprochement des lois des États membres en matière de compatibilité électromagnétique.

IBM ne peut accepter aucune responsabilité pour le manquement aux exigences de protection résultant d'une modification non recommandée du produit, y compris l'installation de cartes autres que les cartes IBM.

Ce produit a été testé et il satisfait les conditions de l'équipement informatique de Classe B en vertu de CISPR22 / Standard européen EN 55022. Les conditions pour l'équipement de Classe B ont été définies en fonction d'un contexte résidentiel ordinaire afin de fournir une protection raisonnable contre l'interférence d'appareils de communication autorisés.

Unione Europea - Directiva EMC (Conformidad électromagnética)

Este producto satisface los requisitos de protección del Consejo de la UE, Directiva 89/336/CEE en lo que a la legislatura de los Estados Miembros sobre compatibilidad electromagnética se refiere.

IBM no puede aceptar responsabilidad alguna si este producto deja de satisfacer dichos requisitos de protección como resultado de una modificación no recomendada del producto, incluyendo el ajuste de tarjetas de opción que no sean IBM.

Este producto ha sido probado y satisface los límites para Equipos Informáticos Clase B de conformidad con el Estándar CISPR22 y el Estándar Europeo EN 55022. Los límites para los equipos de Clase B se han establecido para entornos residenciales típicos a fin de proporcionar una protección razonable contra las interferencias con dispositivos de comunicación licenciados.

Union Europea - Normativa EMC

Questo prodotto è conforme alle normative di protezione ai sensi della Direttiva del Consiglio dell'Unione Europea 89/336/CEE sull'armonizzazione legislativa degli stati membri in materia di compatibilità elettromagnetica.

IBM non accetta responsabilità alcuna per la mancata conformità alle normative di protezione dovuta a modifiche non consigliate al prodotto, compresa l'installazione di schede e componenti di marca diversa da IBM.

Le prove effettuate sul presente prodotto hanno accertato che esso rientra nei limiti stabiliti per le le apparecchiature di informatica Classe B ai sensi del CISPR 22 / Norma Europea EN 55022. I limiti delle apparecchiature della Classe B sono stati stabiliti al fine di fornire ragionevole protezione da interferenze mediante dispositivi di comunicazione in concessione in ambienti residenziali tipici.

この装置は、情報処理装置等電波障害自主規制協議会（ＶＣＣＩ）の基準に基づくクラスＢ情報技術装置です。この装置は、家庭環境で使用することを目的としていますが、この装置がラジオやテレビジョン受信機に近接して使用されると、受信障害を引き起こすことがあります。
取扱説明書に従って正しい取り扱いをして下さい。

IBM

Part Number: 37L1381

Printed in U.S.A.

37L1381