SENSATION! (250-1651) Audio Adapter Layout Faxback Doc. # 2726

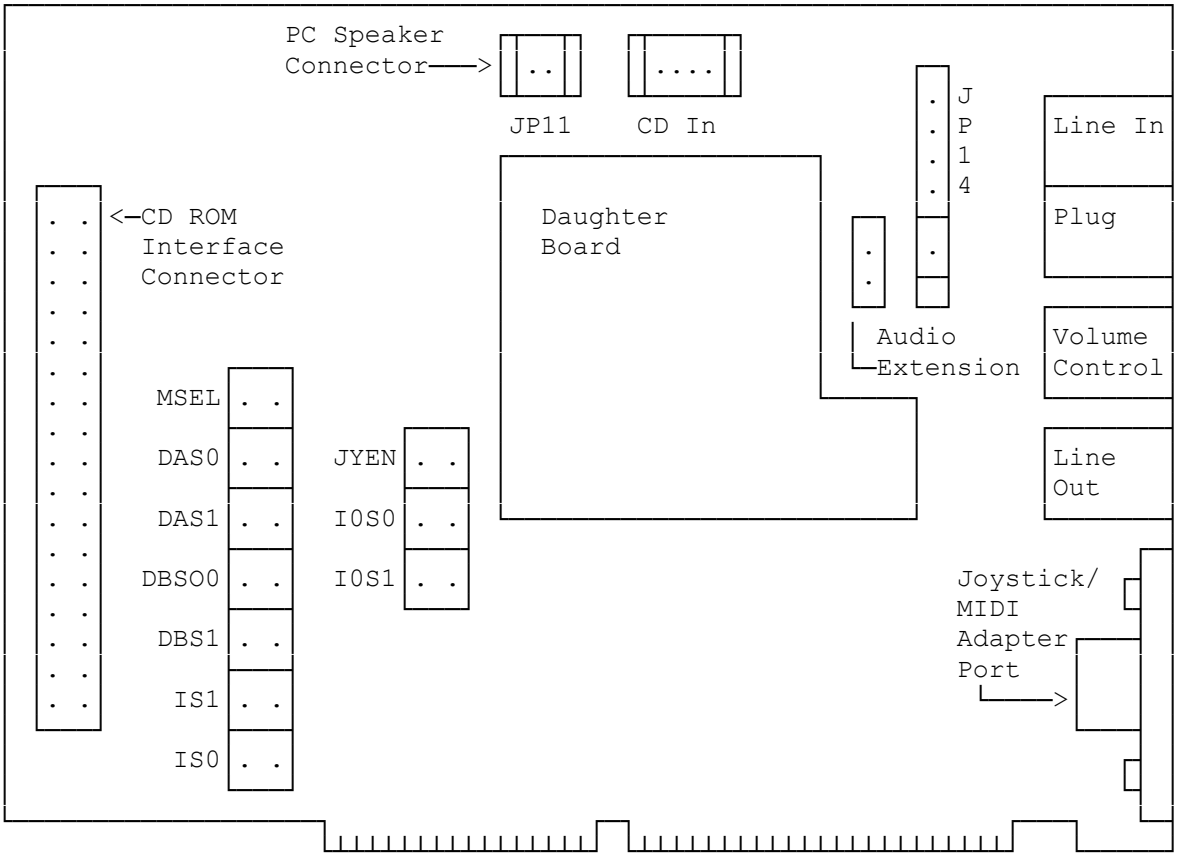

(smc-12/06/93)